INLET AND EXHAUST MANIFOLD WITH INSTALLATION COMPONENTS: TAMD31B

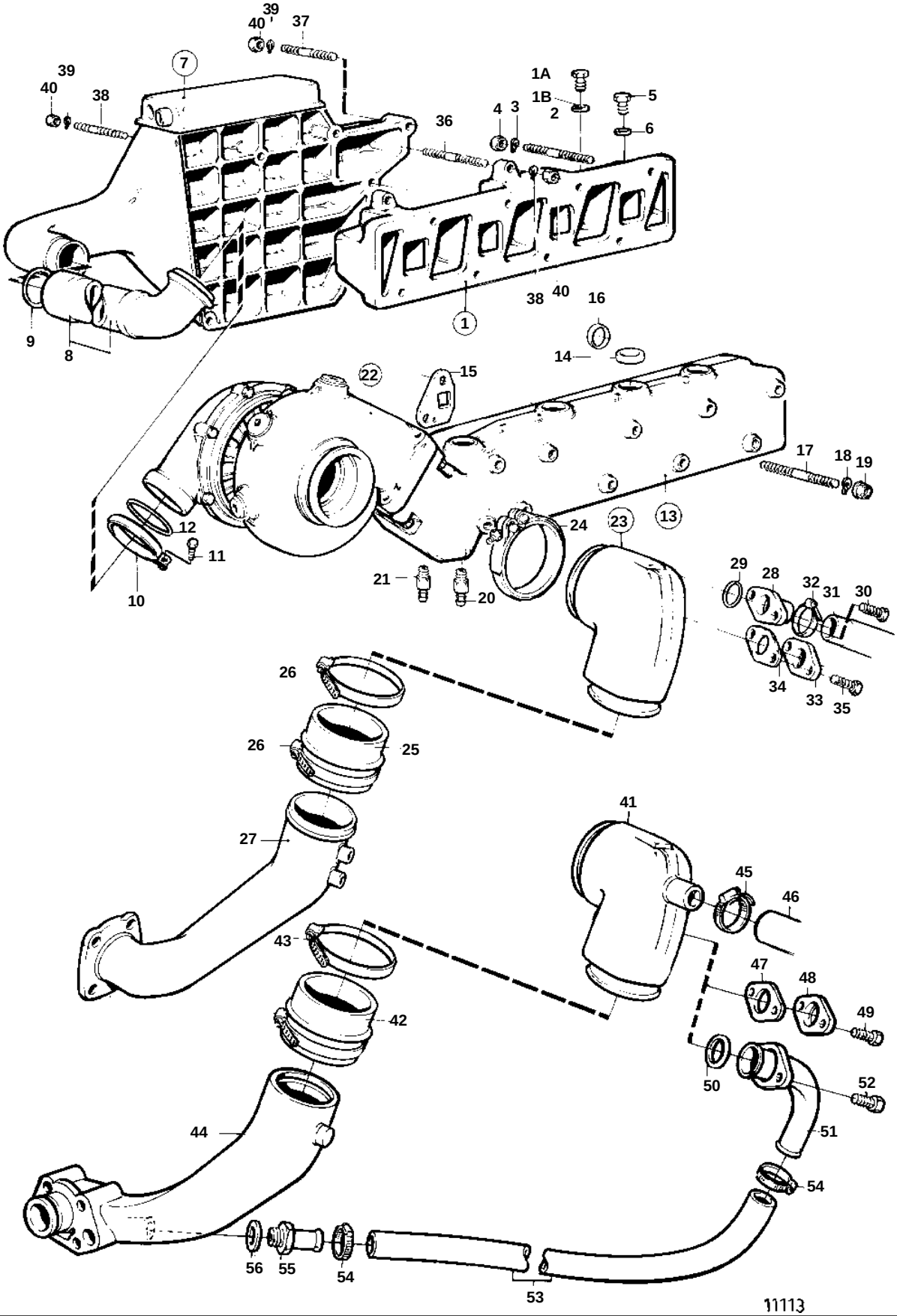

REF	PART NO.	QTY	DESCRIPTION		SEE SEC.	NOTES
1	859299	1	Inlet pipe			
1A	960634	4	Plug			
1B	947627	4	Gasket			
2	924068	6	Stud			
3	941907	6	Spring washer			EARLY TYPE
4	945408	6	Flange nut			
5	960632	1	Plug			
6	947624	1	Gasket			
7		1	AFTER COOLER		02B-3000	
8	838693	1	Connection pipe			
9	471449	1	Sealing ring			
10	838864	1	Clamp			
11	947542	1	Screw			
12	967944	1	O-ring			
13	860460	1	Exhaust pipe			
14	946780	8	· Cap plug			
15	876144	2	Gasket kit			
16	838766	1	Sealing ring			
17	953007	1	Stud			L = 150 MM
	953003	1	Stud			L = 130 MM
	953001	2	Stud			L = 120 MM
	952999	4	Stud			L = 110 MM
18	941908	6	Spring washer			EARLY TYPE
19	971095	8	Nut			
20	949918	1	Drain cock			
21	947893	1	Drain cock			
22		1	TURBO WITH INSTALLATION COMPONENTS			
					02B-1100	
23	859963	1	Exhaust riser			
24	842993	1	Clamp			
28	858659	1	Hose connection			
29	842913	1	Sealing ring			
30	946544	2	Flange screw			
31	944386	X	Hose			L = 335 MM. HEAT EXCHANGER-EXHAUST PIPE.
32	943475	1	Hose clamp			
33	844093	1	Flange			
34	859002	1	Gasket			
35	946544	2	Flange screw			
36	953049	2	Stud			L = 50 MM
37	17942	1	Stud			L = 110 MM
38	838854	1	Stud			L = 185 MM
39	941907	3	Spring washer			
40	945408	4	Flange nut			

REF	PART NO.	QTY	DESCRIPTION		SEE SEC.	NOTES